LF411 Operational Amplifier

Kirk Guotana
A37602559
ECE 480
11/11/11

Table of Contents

Executive Summary 2
Introduction 3
Pin Description 4
Inverting Amplifier 5
Non-inverting Amplifier 6
Other Applications 7
Conclusion 9
Works Cited 10

Executive Summary

This application note has been created to provide assistance in understanding and making use of the LF411 operational amplifier to be used to increase, decrease or invert an input voltage. The main applications and ratings of the op-amp will be discussed.

Keywords: LF411, JFET Op-Amp, Low Offset Op-Amp, Low Drift Op-Amp, Inverting, Non-inverting

Introduction

The LF411 is an operational amplifier made by National Semiconductor. It is a low offset, low drift JFET input op-amp. One advantage of this op-amp is that it maintains a large gain bandwidth and fast slew rate (rate of change) with a low supply of current. Another advantage is that the LF411 is compatible with the popular LM741 for easy upgrade without redesign. Applications for the LF411 include high speed integrators, D/A converters, sample and hole circuits, and all other applications where the circuit requires a low input offset voltage and drift, low input bias current, high input impedance, a high slew rate, and a wide bandwidth.

Pin Description

The LF411 contains 8-pins. Pin 1 and 5 are for balance or offset null. Balance pins interact with an external voltage source that is attached to a variable resistor or other potentiometer to balance the input current. This is especially important for circuits that require precise DC accuracy. Pin 2 is the negative pin and the input for an inverting op-amp. Pin 3 is the positive pin and the input for a non-inverting op-amp. Pin 4 is for the negative power supply of -15 volts and pin 7 is the positive power supply of +15volts. Pin 6 is the output of the op-amp. Pin 8 is labeled NC for no connection.

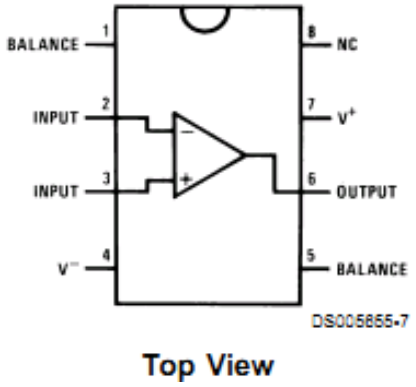

Figure 1: Pin Labels

Inverting Amplifier

1) Determine the input voltage (Vin) and desired output voltage (Vout).
2) Choose Ri.
3) Calculate Rf.
    a. Vout=Vin($-\frac{Rf}{Ri}$)
    b. Rf=-(Ri*($\frac{Vout}{Vin}$))
4) Connect resistors to the LF411.
5) Ground pin 3, the positive LF411 input.
6) Attach +15v to pin 4 and -15v to pin 7 on the LF411.
7) Verify Vout is desired output at pin 6.

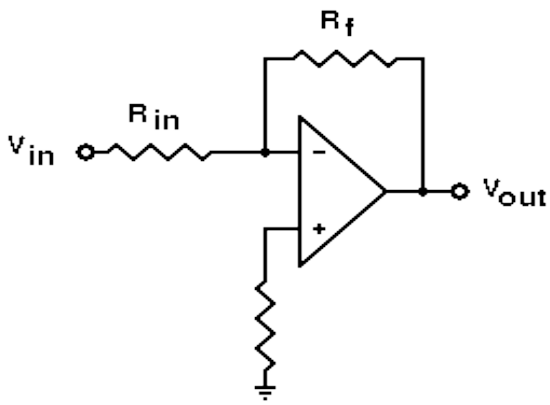

Figure 2: Inverting Op-Amp

Non-inverting Amplifier

1) Determine the input voltage (Vin) and desired output voltage (Vout).
2) Choose Ri.
3) Calculate Rf.
    a. Vout=Vin$(1+\frac{Rf}{Ri})$
    b. Rf=Ri*$(\frac{Vout}{Vin}-1)$
4) Connect resistors to the LF411.
5) Attach +15v to pin 4 and -15v to pin 7 on the LF411.
6) Verify Vout is desired output at pin 6.

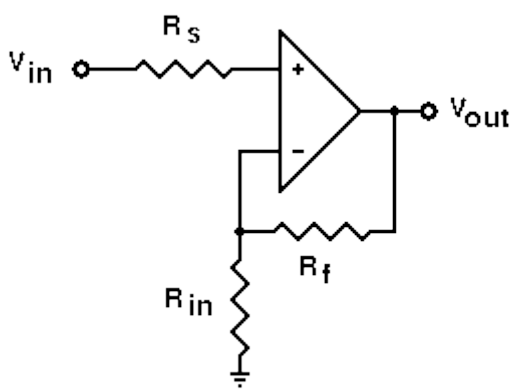

Figure 3: Non-inverting Op-Amp

Other Applications

The LF411 has many other applications. A few of these applications include a high speed current booster, 10-bit linear digital to analog converter, and as a single supply analog switch.

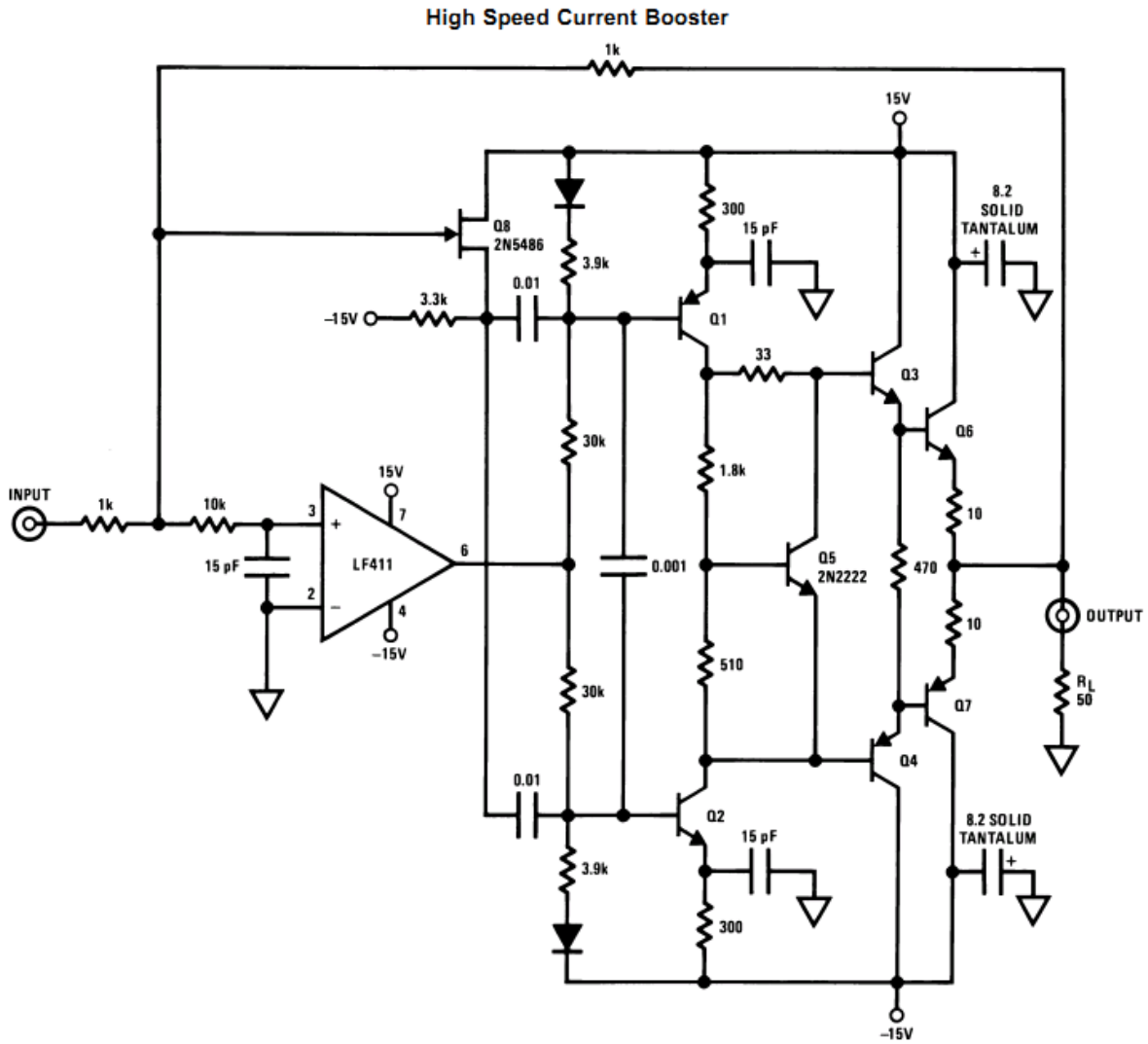

Figure 4: High Speed Current Booster

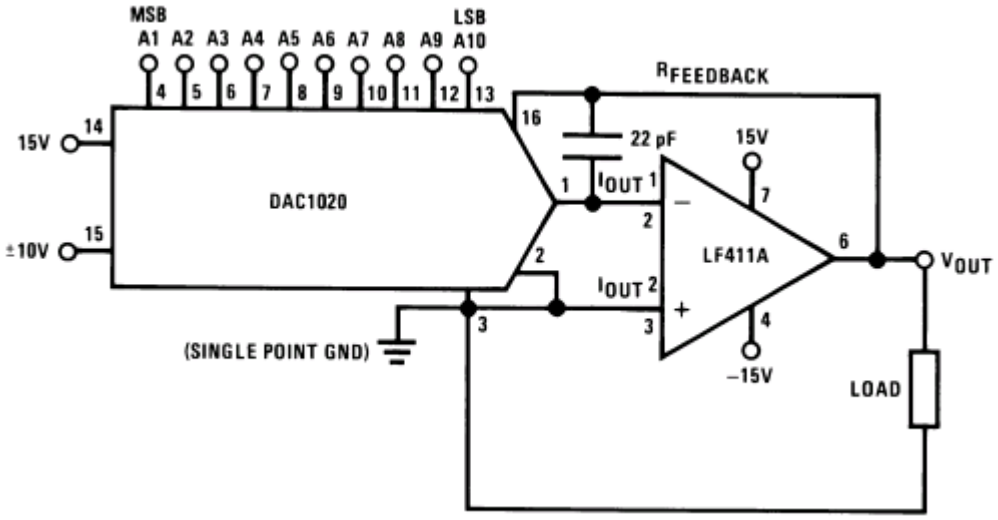

Figure 5: 10-bit Linear DAC

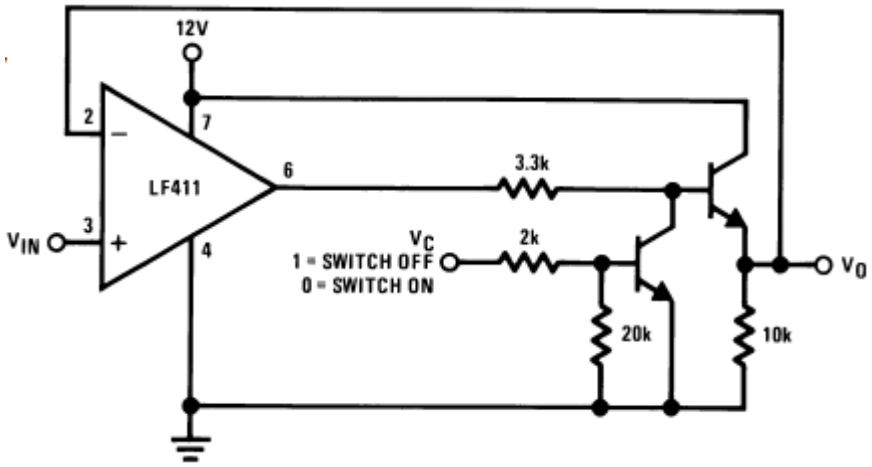

Figure 6: Single Supply Analog Switch

Conclusion

The LF411 has many applications and can be very versatile. Compared with the LM741CN, the LF411 provides and advantage in a few key areas including a faster slew rate, lower bias current, higher gain bandwidth, and provides a balance pin to offset the voltage. One of the biggest limitations of the LF411 is that for operation, two power supplies are required (Positive and Negative).

Works Cited

Mancini, Ron. "Op Amps For Everyone." Texas Instruments. Web. 10 Nov. 2011. http://www.ti.com/lit/an/slod006b/slod006b.pdf

National Semiconductor. "LF411 Specifications Sheet." National Semiconductor. Web. 10 Nov. 2011. http://www.national.com/ds/LF/LF411.pdf